TIGHTEN ALL HARDWARE PER SIZE TO GRADE 5 TORQUE (SEE STANDARD TORQUE SPECIFICATIONS FOR BOLTS, SECTION 9) UNLESS OTHERWISE SPECIFIED.

bobcat®

741, 742, 743 & 743DS Bobcat Loader
Service Manual

TROUBLESHOOTING

Chart

The following troubleshooting chart is provided for assistance in locating and correcting problems which are most common. Many of the recommended procedures must be done by authorized Bobcat Service Personnel only.

⚠ WARNING

Check for correct function after adjustments, repairs or service. Failure to make correct repairs or adjustments can cause injury or death.

W–2004–1285

PROBLEM	CAUSE
No drive on one side, in one direction.	1, 2, 3, 4, 5
No drive on one side in both directions.	2, 5, 6, 7, 8
The loader does not move in a straight line.	2, 3, 4, 6, 8, 9, 10
The hydrostatic system is overheating.	4, 11, 12, 13, 14, 15
The oil light comes ON .	16, 17, 18

KEY TO CORRECT THE CAUSE

1. The hydrostatic system has a fluid leak.
2. The steering linkage needs adjustment.
3. The high pressure replenishing valve(s) are damaged.
4. the shuttle valve in the hydrostatic motor is not working correctly.
5. The valve plate seals in the hydrostatic motor are damaged.
6. The hydrostatic pumps have damage.
7. The final drive chain is broken.
8. The hydrostatic motor has damage.
9. The tires do not have the correct tire pressure.
10. The tires are not the same size.
11. The hydraulic fluid is not at the correct level.
12. The oil cooler has a restriction.
13. The temperature sending switch is not operating correctly.
14. The control valve is not operating correctly.
15. The loader is not being operated at the correct RPM.
16. The sender is defective.
17. There is low charge pressure.
18. The charge relief valve is damaged.

IMPORTANT

When repairing hydrostatic and hydraulic systems, clean the work area before disassembly and keep all parts clean. Always use caps and plugs on hoses, tubelines and ports to keep dirt out. Dirt can quickly damage the system.

I–2003–0888

High Pressure Relief/Replenishing Valve Function

The valves for forward movement are different from the valves for reverse travel.

The high pressure relief/replenishing valves for forward travel, also release very high pressure.

The functions of the replenishing valves are:

1. To give replacement fluid to the low pressure side of the hydrostatic circuit. Replacement fluid is needed because of normal internal leakage and the controlled flow to the oil cooler for cooling; Function 1 **[A]** and Function 1 **[B]**.
2. To keep high pressure fluid out of the low pressure side of the hydrostatic circuitry; Function 2 **[A]** and Function 2 **[B]**.
3. To release high pressure caused by moving forward with a heavy load on the loader, Function 3 **[A]**.

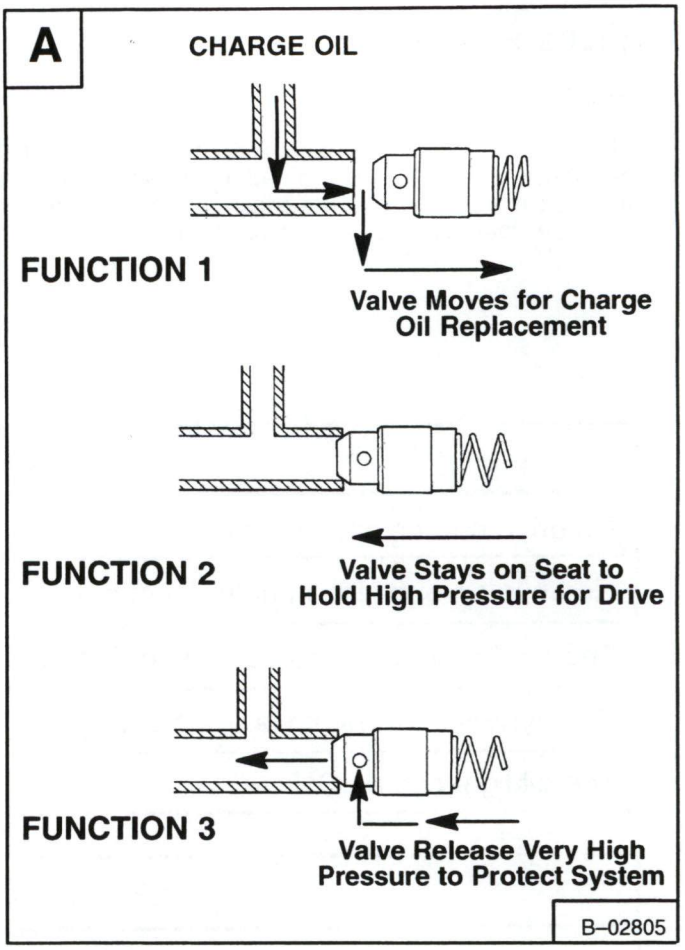

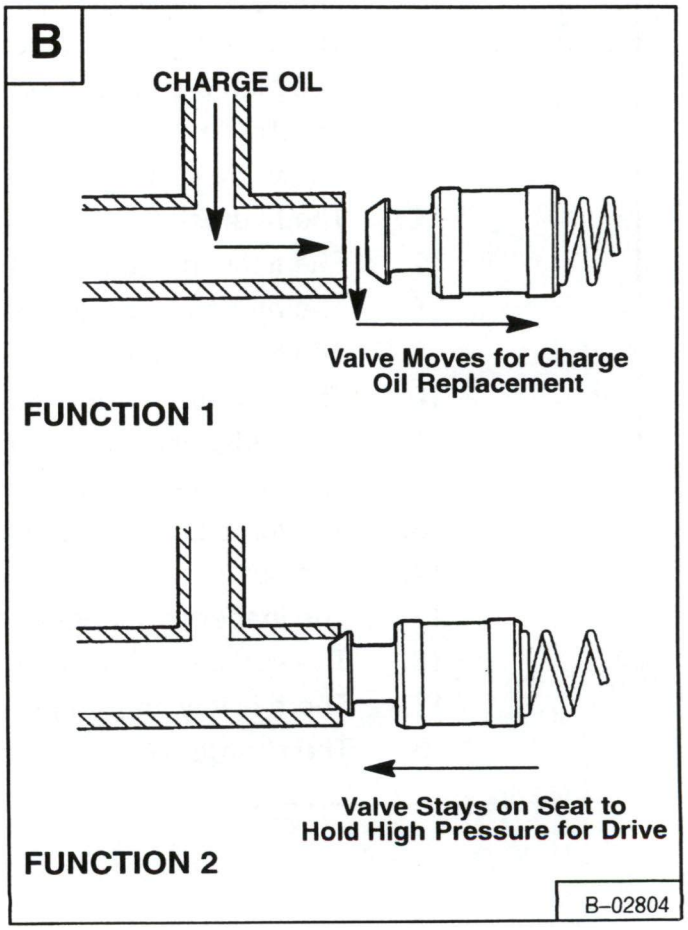

STEERING LEVERS

Removal And Installation

NOTE: Early production machines used 3–piece assembly. Current production machines use 1–piece shield which must be removed as a unit.

Remove the front panel **[A]**.

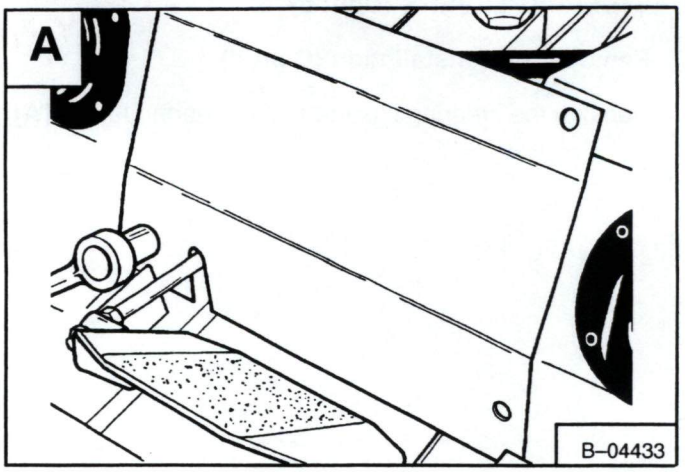

IMPORTANT

When repairing hydrostatic and hydraulic systems, clean the work area before disassembly and keep all parts clean. Always use caps and plugs on hoses, tubelines and ports to keep dirt out. Dirt can quickly damage the system.

I–2003–0888

Remove the bolts and remove both side shields **[B]**.

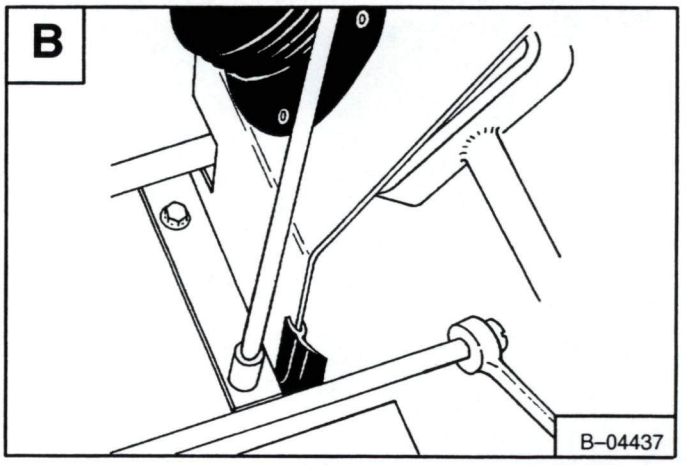

Remove the bolts from the steering lever shield **[C]** & **[D]**.

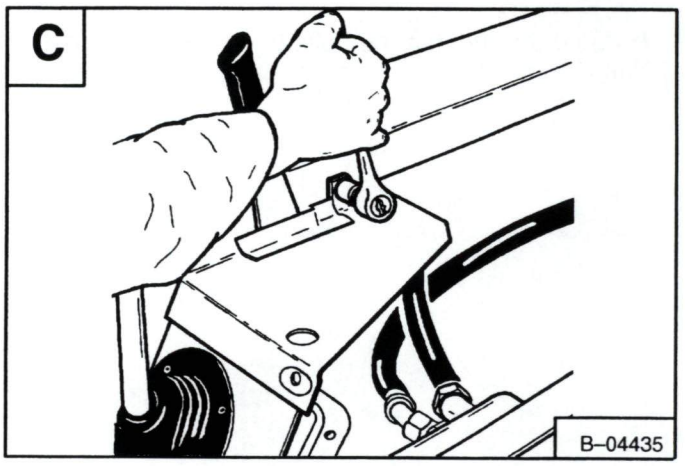

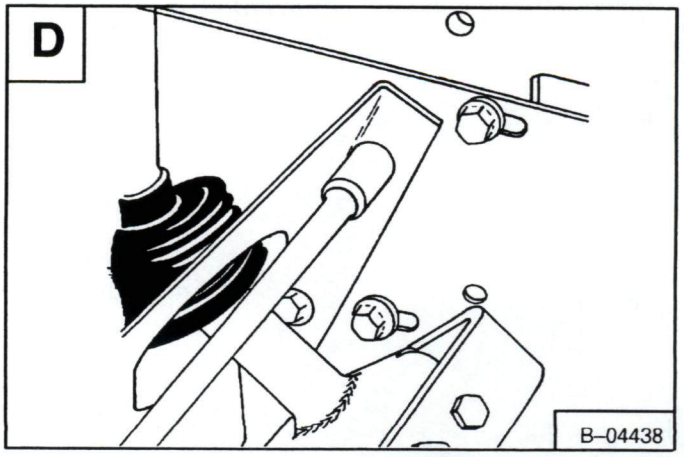

STEERING LEVERS (Cont'd)

Removal And Installation (Cont'd)

Remove the steering linkage at the steering levers **[A]**.

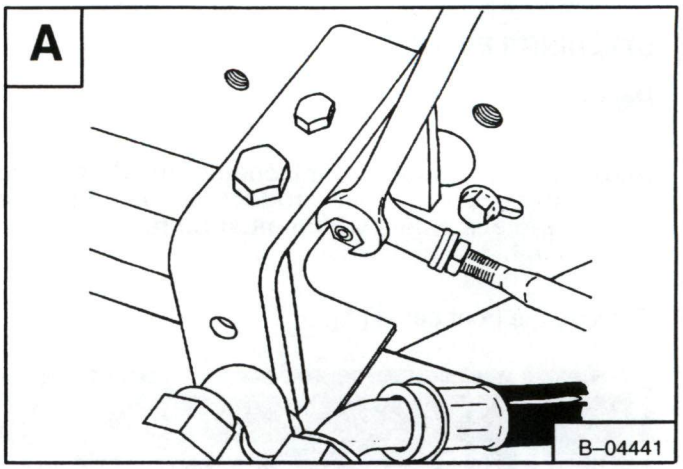

Disconnect the auxiliary linkage from the right steering lever **[B]**.

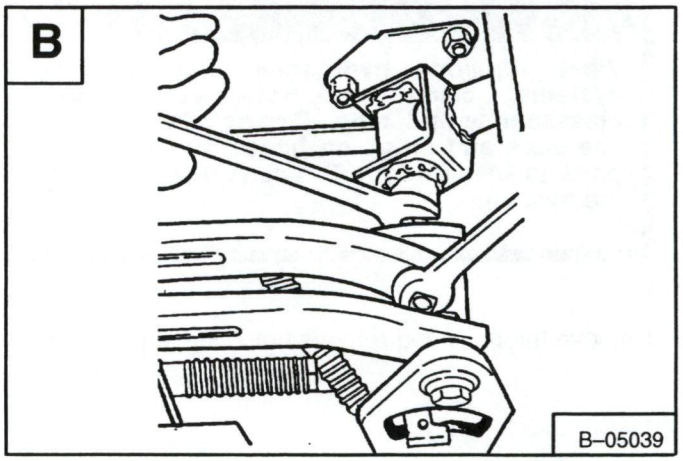

Remove the bolts (Item 1) **[C]** from the pivot bearings.

Installation: Tighten the bolts to 25–28 ft.–lbs. (34–38 Nm) torque.

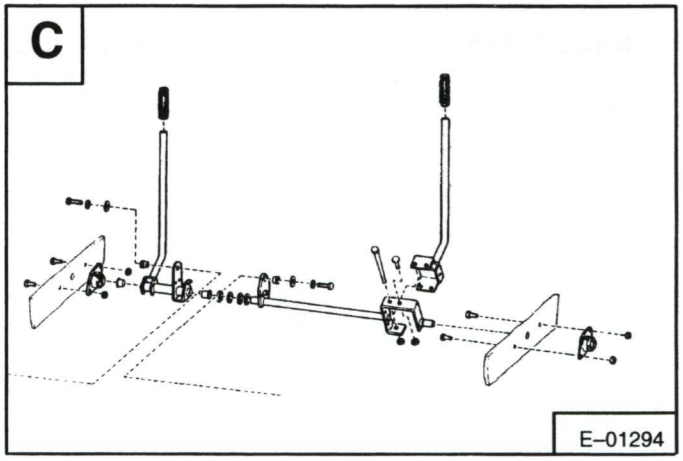

Remove the steering lever assembly **[D]**.

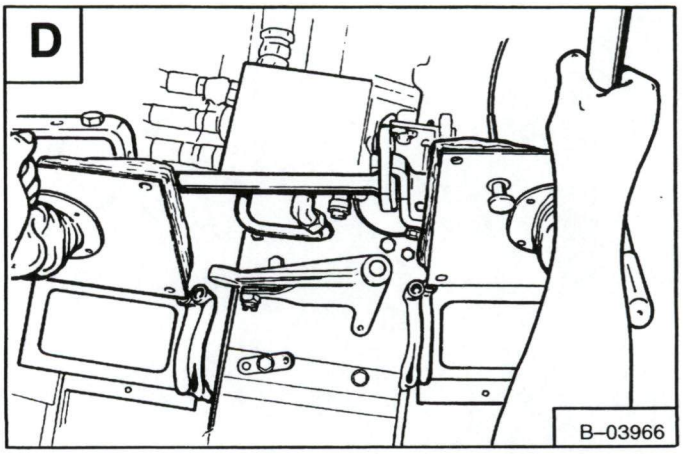

STEERING LEVERS (Cont'd)

Repairing The Steering Levers

Remove the rubber bushing and the Teflon bushing from the steering levers.

Install the new rubber bushings into the steering levers using two sockets and a vise **[A]**.

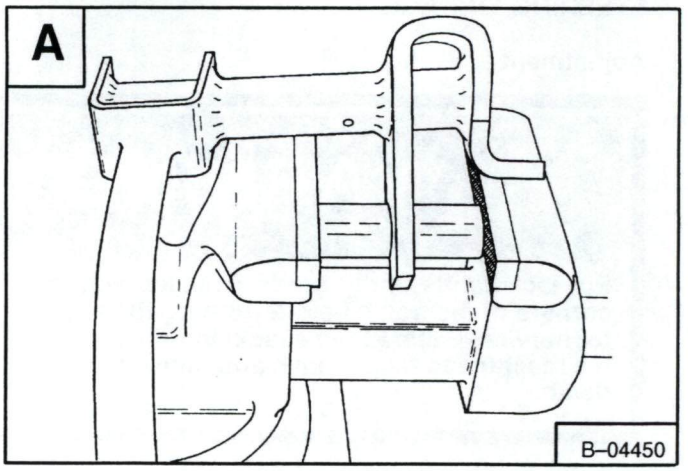

Install the Teflon bushings on the steering levers **[B]**.

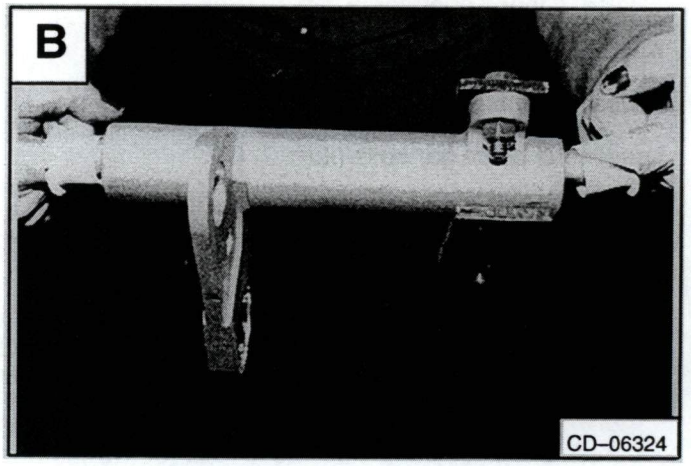

Install the two steering lever assemblies together **[C]**.

Check the pivot bearings and replace as needed.

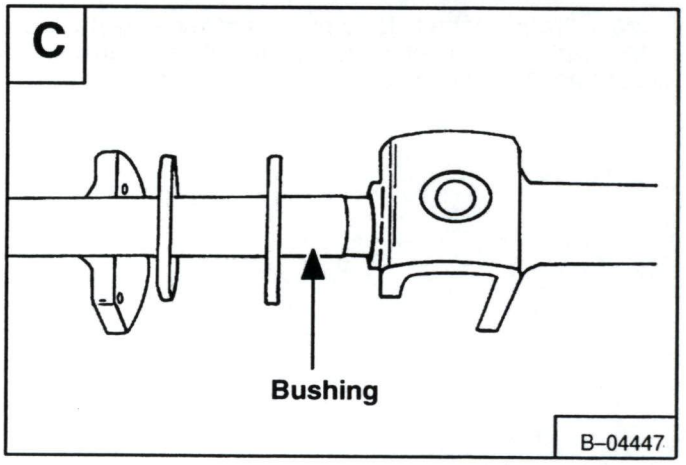

STEERING LINKAGE

Adjustment

⚠ WARNING

Put jackstands under the front axles and rear corners of the frame before running the engine for service. Failure to use jackstands can allow the machine to fall or move and cause injury or death.

W–2017–0286

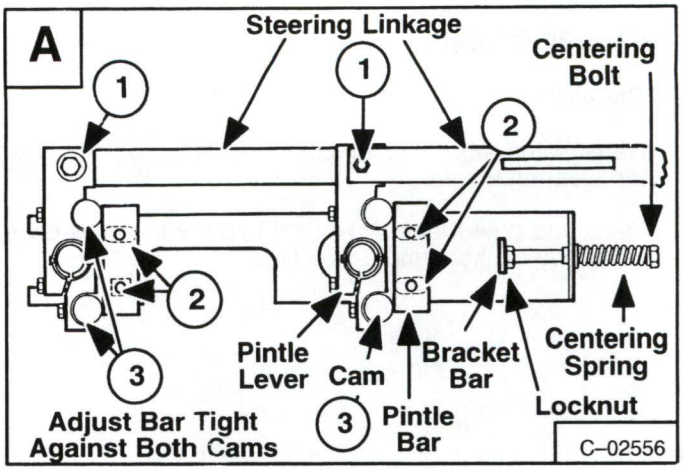

Raise the operator cab. (See *PREVENTIVE MAINTENANCE* Section 1.)

Loosen the linkage (Item 1) **[A]** at both pintle arms.

Loosen the pintle bar bolts (item 2) **[A]**.

Connect the remote start switch MEL1128A. (See *PREVENTIVE MAINTENANCE* Section 1.)

Start the engine and run at slow RPM.

Move the left steering lever until the tires do not turn (neutral). Adjust the rear pintle bar so that the bar is tight against both cams (Item 3) **[A]** of the pintle lever and the transmission is still in neutral.

Tighten the pintle bar bolts to 28 ft.–lbs. (38 Nm) torque.

Move the left steering lever backward and forward and let the transmission return to neutral. If the transmission does not go back to neutral. repeat the procedure.

STEERING LINKAGE (Cont'd)

Adjustment (Cont'd)

Move the right steering lever until the tires do not turn (neutral). Adjust the front pintle bar so that the bar is tight against both cams (Item 1) **[A]**.

Tighten the pintle bar bolts to 28 ft.–lbs. (38 Nm) torque.

Move the right steering lever backward and forward and let the transmission return to neutral. If the transmission does not go back to neutral, repeat the procedure.

Tighten the bolts holding the steering linkage to the pintle levers to 12 ft.–lbs. (16 Nm) torque.

Install the locknuts on each bolt and tighten to 23 ft.–lbs. (31 Nm) torque.

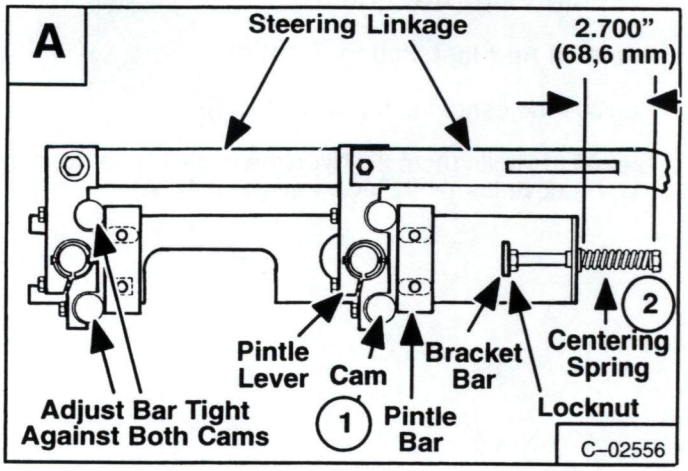

Removal And Installation

Raise the operator cab. (See *PREVENTIVE MAINTENANCE* Section 1.)

Remove the steering linkage bolts from the steering levers **[B]**.

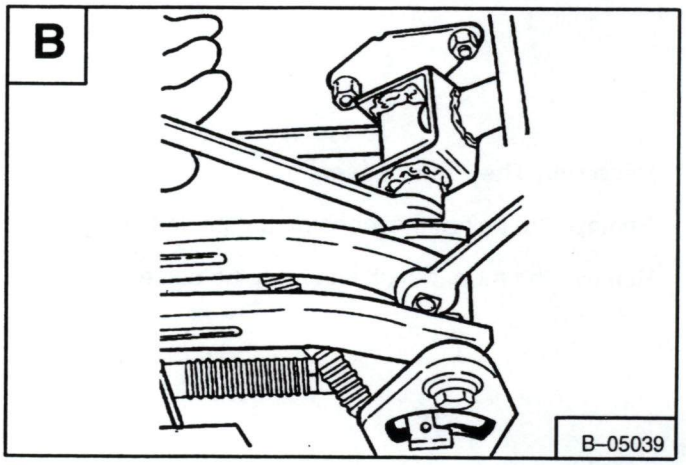

Remove the bolts from the pintle arms **[C]**.

Remove the centering bolt and spring (Item 2) **[A]**.

Installation: Adjust the centering spring bolt to compress the spring to 2.700 inches (68,6 mm) **[A]**.

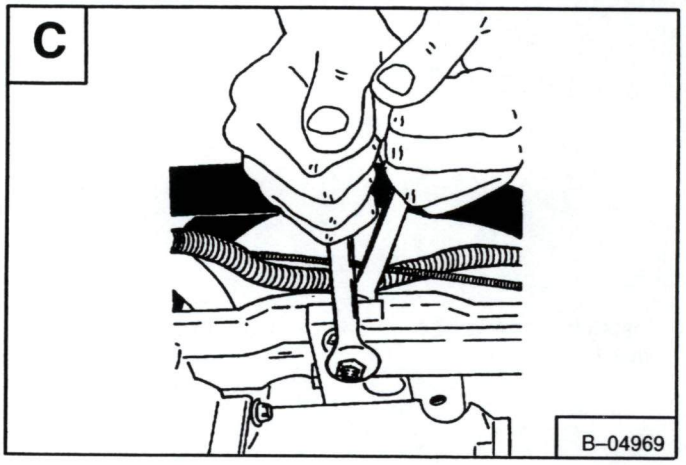

Removal And Installation (Cont'd)

Remove the centering bar (Item 1) **[A]**.

Loosen the bolts (Item 2) **[A]** on the pintle levers (Item 3) **[A]**. Remove the pintle lever key (Item 4) **[A]**.

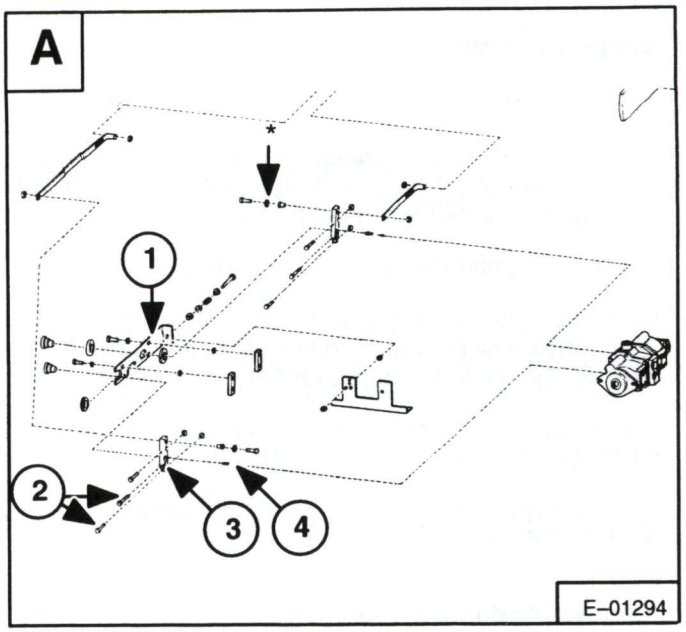

Repairing The Pintle Lever

Remove the bolt at the lobes on the pintle lever **[B]**.

Remove the rubber bushings from the pintle levers.

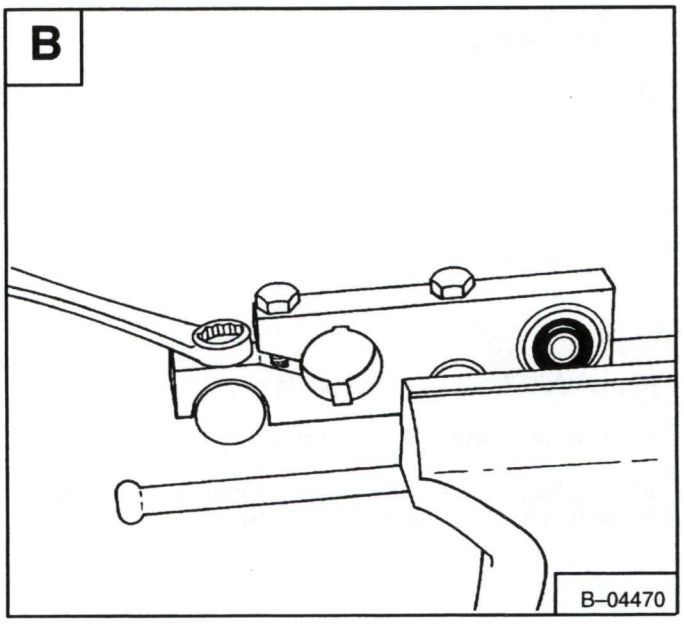

Install the new rubber bushings using two sockets and a vice **[C]**.

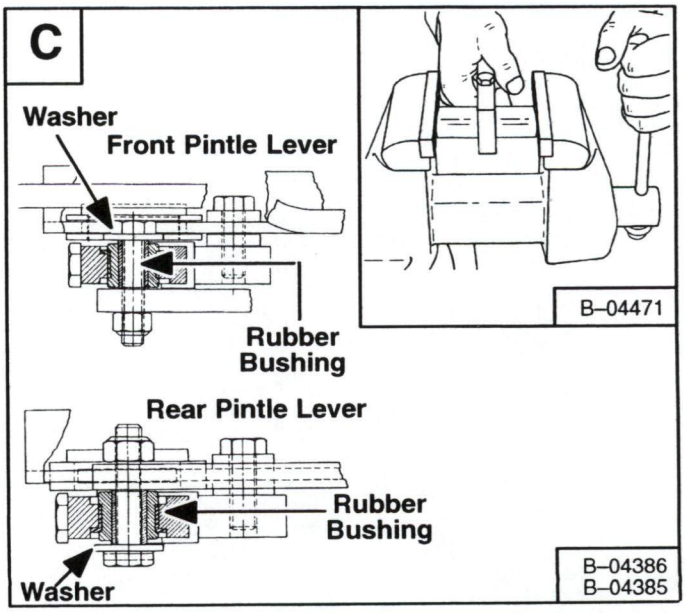

STEERING LINKAGE (Cont'd)

Repairing The Pintle Lever (Cont'd)

Install the new lobes on the pintle lever and tighten to 25–28 ft.–lbs. (34–38 Nm) torque **[A]**.

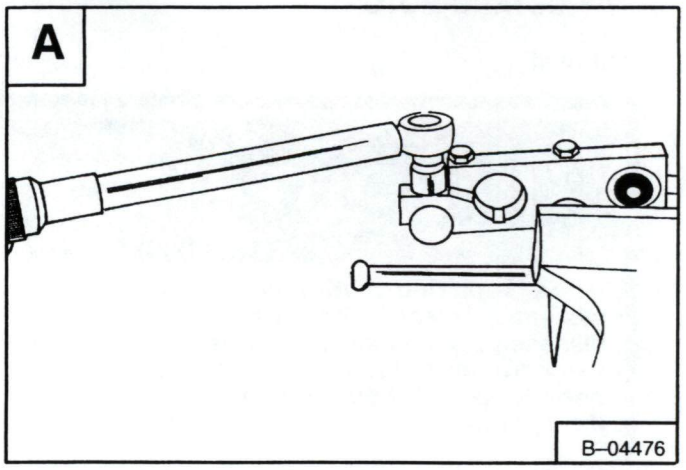

Install the bushing and the guide in the pintle lever.

Install the key on the shaft of the hydrostatic pump and install the pintle lever assembly **[B]**.

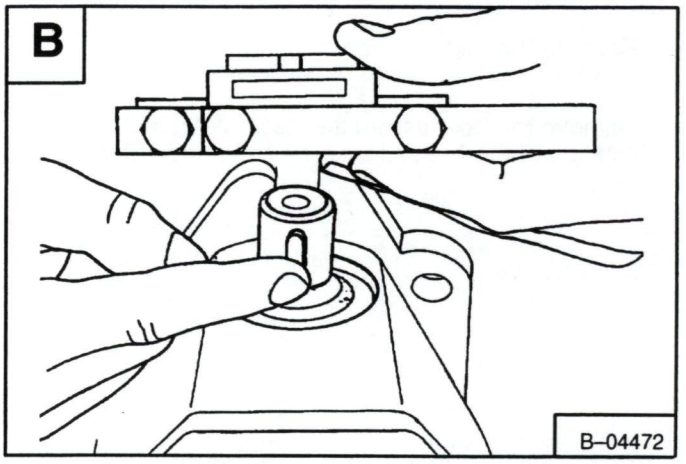

Tighten the bolt on the pintle lever to 18–20 ft.–lbs. (24–27 Nm) torque **[C]**.

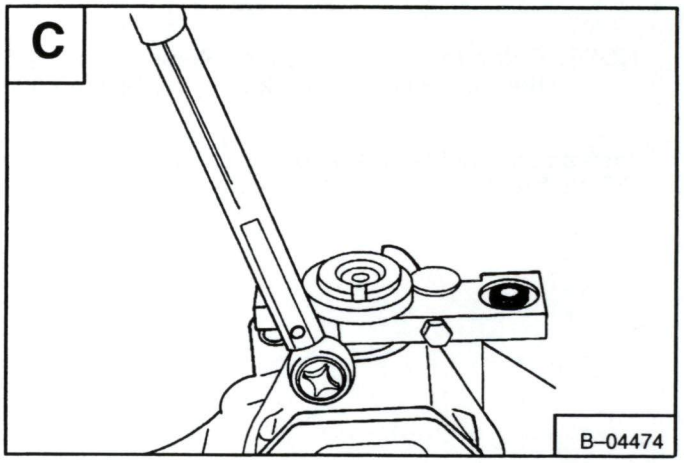

HYDROSTATIC MOTOR

Removal

IMPORTANT

When repairing hydrostatic and hydraulic systems, clean the work area before disassembly and keep all parts clean. Always use caps and plugs on hoses, tubelines and ports to keep dirt out. Dirt can quickly damage the system.

I–2003–0888

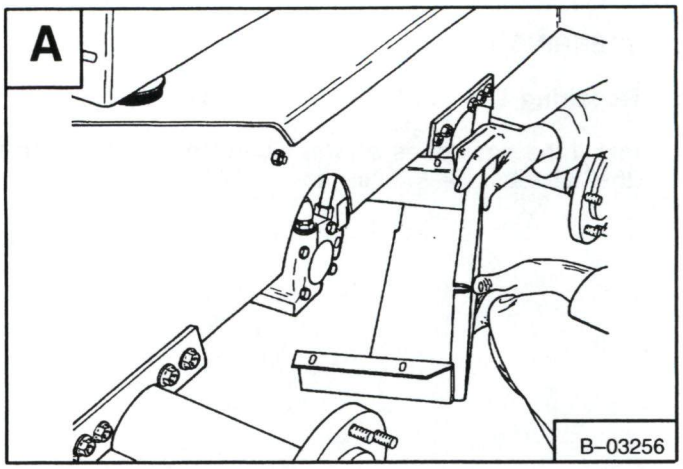

Remove the motor cover **[A]**.

Remove the hoses from the hydrostatic motor. Note the location of the hoses for correct assembly **[B]**.

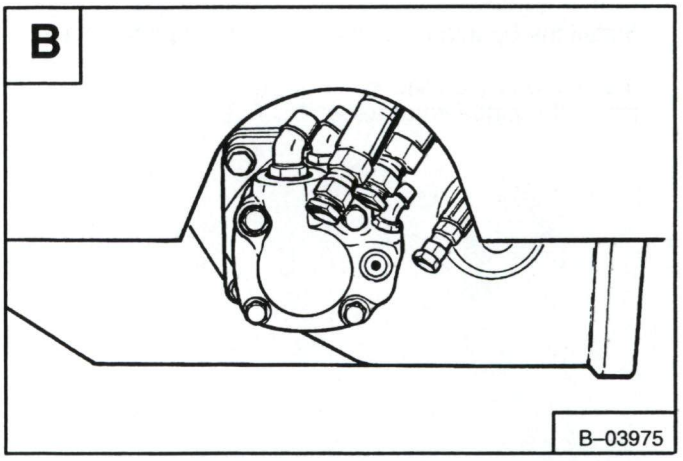

Remove the mounting bolts and remove the motor **[C]**.

NOTE: Refer to the Component Repair Manual for the disassembly and assembly procedure.

Installation: Tighten the mounting bolts to 65–70 ft.–lbs. (88–95 Nm) torque.

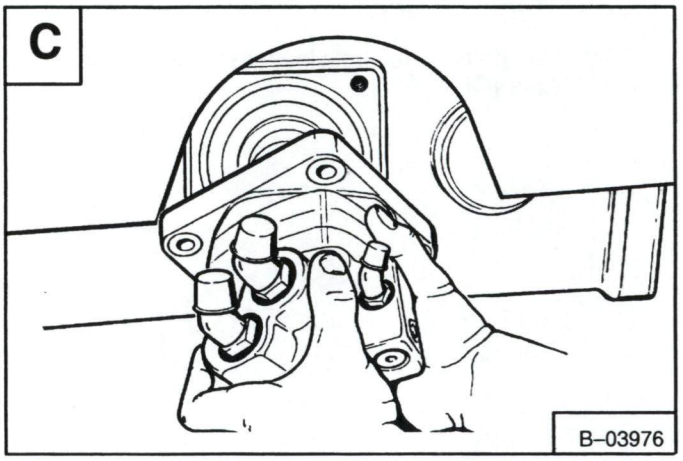

IMPORTANT

When repairing hydrostatic and hydraulic systems, clean the work area before disassembly and keep all parts clean. Always use caps and plugs on hoses, tubelines and ports to keep dirt out. Dirt can quickly damage the system.

I–2003–0888

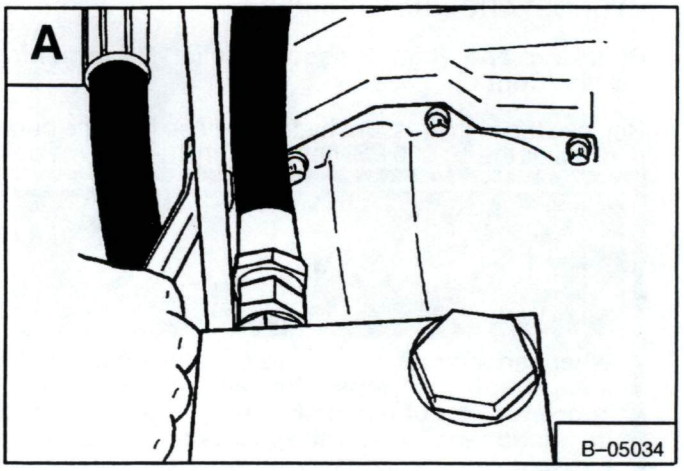

Checking The High Pressure Relief Replenishing Valves

The tool listed will be needed to do the following procedure:

MEL1173 – Gauge Test Kit

Lift and block the loader. (See *PREVENTIVE MAINTENANCE* Section 1 for the correct procedure.)

Raise the operator cab. (See *PREVENTIVE MAINTENANCE* Section 1 for the correct procedure.)

If there is a loss of drive in one direction, to one side of the loader, use the following procedure to check the valves.

Remove both plugs and the replenishing valves that controls the direction of drive that was lost **[A]**.

Switch the replenishing valves around. Install and tighten the plugs.

Connect the remote start switch MEL1138A. (See *PREVENTIVE MAINTENANCE* Section 1.)

Start the engine and check the drive.

If the loss of drive goes to the other side, the valve which controls that side of the loader must be replaced.

To Use The Special Tool Kit (MEL1173)

⚠ WARNING

Put jackstands under the front axles and rear corners of the frame before running the engine for service. Failure to use jackstands can allow the machine to fall or move and cause injury or death.

W–2017–0286

HYDROSTATIC PUMP (Cont'd)

Checking The High Pressure Relief Replenishing Valves (Cont'd)

Remove the high pressure hydraulic hose from the pump port. Install the 10,000 PSI gauge (from the kit) in the port.

⚠ WARNING

When an engine is running in an enclosed area, fresh air must be added to avoid concentration of exhaust fumes. If the engine is stationary, vent the exhaust outside. Exhaust fumes contain odorless, invisible gases which can kill without warning.

W–2050–1285

Connect the remote start switch MEL1138A. (See *PREVENTIVE MAINTENANCE* Section 1.)

Run the engine at idle RPM. Engage the drive lever a small amount. The pressure must reach 3500–4000 PSI (24133–27580 kPa. DO NOT exceed 4000 PSI (27580 kPa).

Replace the valves as needed.

Checking Charge Pressure (S/N 14999 & Below)

the tools listed will be needed to do the following procedure:

MEL1163 – Test Kit
MEL1138A – Remote Start Switch

Raise the operator cab. (See *PREVENTIVE MAINTENANCE* Section 1.)

Remove the temperature sender from the port block **[A]**.

Connect the gauge (from the kit) to the port block in the temperature sender port **[B]**.

The pressure should read 140–170 PSI (965–1172 kPa).

NOTE: Refer to the Component Repair Manual for the disassembly and assembly procedure.

Remove the gauges. Install the switch and connect the sender wire.

Checking Charge Pressure (S/N 15001 & Above)

The tools listed will be needed to do the following procedure:

MEL1173A – Test Kit
MEL1138A – Remote Start Switch

Raise the operator cab. (See *PREVENTIVE MAINTENANCE* Section 1.)

Remove the switch from the elbow on top of the hydrostatic pump.

Connect the gauge (from the kit) to the fitting as shown **[C]**.

Connect the remote start switch MEL1138A. (See *PREVENTIVE MAINTENANCE* Section 1.)

Start the engine and run at full RPM.

The pressure should read 95–115 PSI (655–793 kPa).

NOTE: Refer to the Component Repair Manual for the disassembly and assembly procedure.

Remove the gauges. Install the switch and connect the wire.

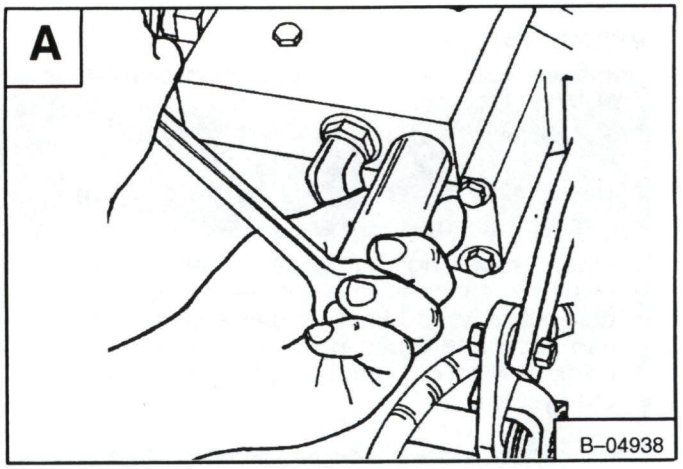

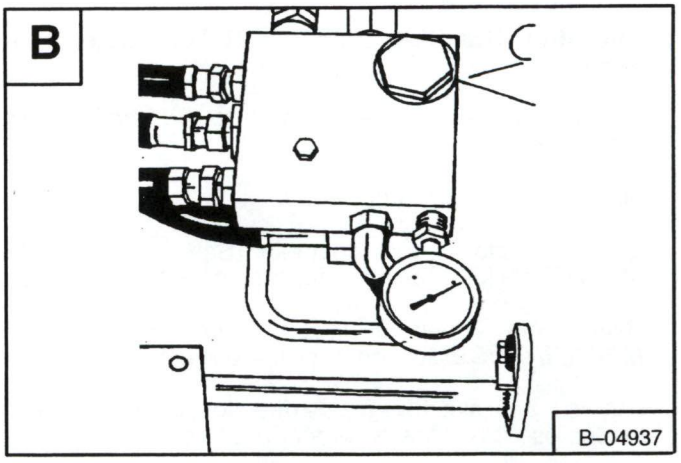

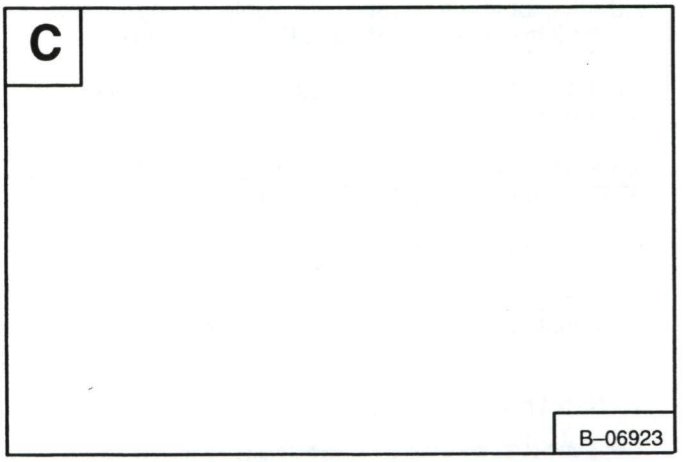

⚠ WARNING

Diesel fuel or hydraulic fluid under pressure can penetrate skin or eyes, causing serious injury or death. Fluid leaks under pressure may not be visible. Use a piece of cardboard or wood to find leaks. Do not use your bare hand. Wear safety goggles. If fluid enters skin or eyes, get immediate medical attention from a physician familiar with this injury.

W–2072–0496

HYDROSTATIC PUMP (Cont'd)

Removal

Drain the hydraulic/hydrostatic reservoir. (See *HYDRAULIC SYSTEM* Section 2.)

Remove the front panel and side shields. (See Page 3–3.)

Remove the detent linkage **[A]**.

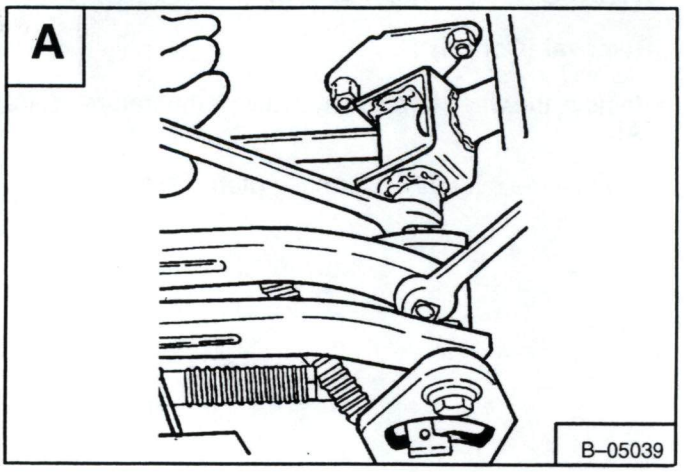

Remove the steering linkage at the steering levers **[B]**.

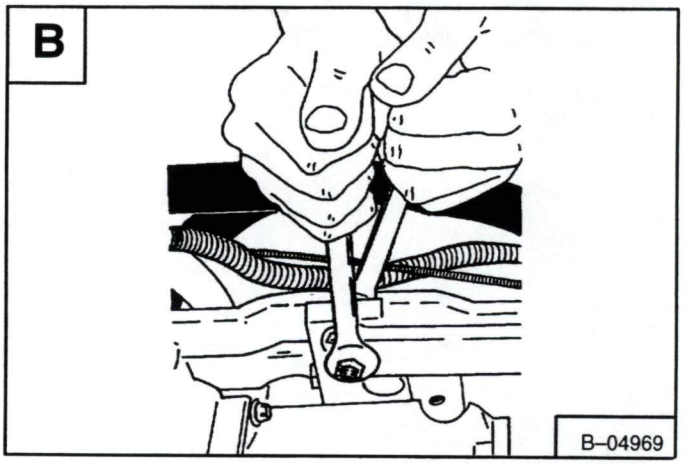

S/N 14999 & Below

Remove the hoses from the port block **[C]**.

Disconnect the hose from the port block to the hydraulic/hydrostatic reservoir.

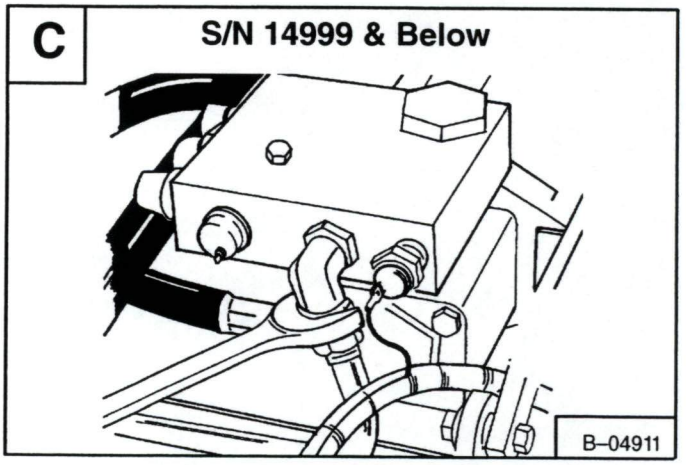

S/N 15001 & Above

Remove the suction hose from the hydraulic pump **[D]**.

Loosen the suction hose fitting at the port block.

Move the hose for ease of pump removal and installation.

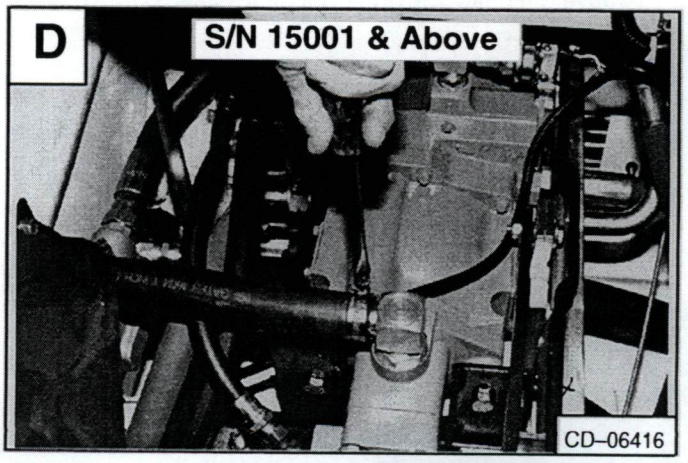

HYDROSTATIC PUMP (Cont'd)

Removal (Cont'd)

Remove the wires from the hydraulic temperature sender **[A]**.

Remove the hydraulic filter hose (Item 1) **[A]**.

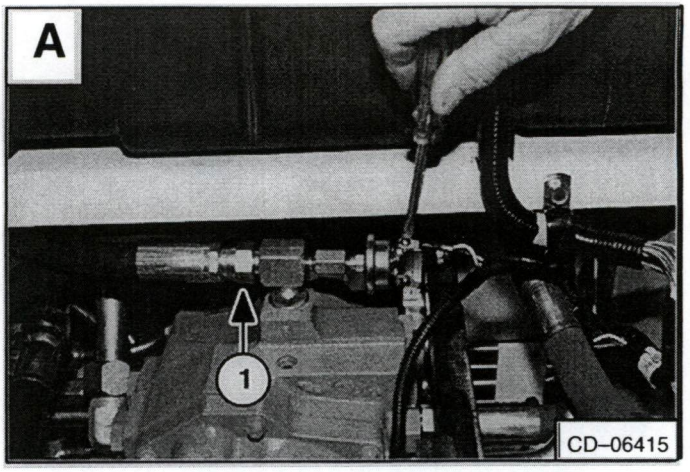

Disconnect the high pressure hoses (Items 1 & 2) from the hydrostatic pump **[B]** & **[C]**.

Disconnect the wire from the temperature switch on the port block.

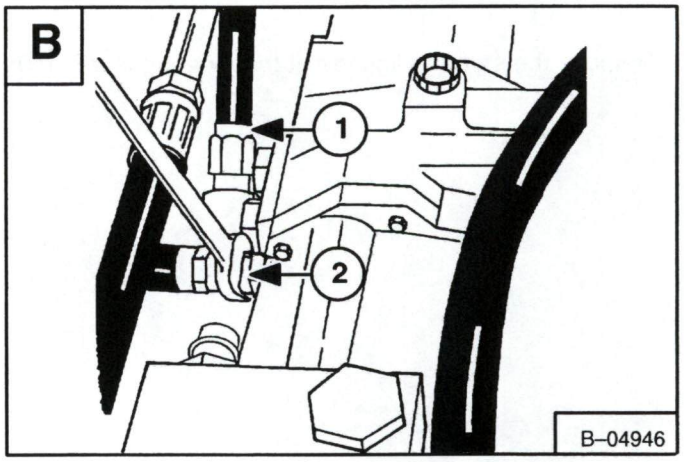

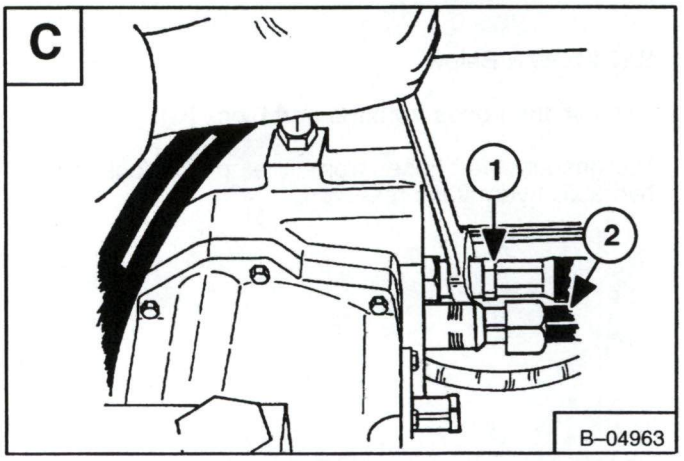

Remove the bolts from the front hydrostatic pump mounts **[D]**.

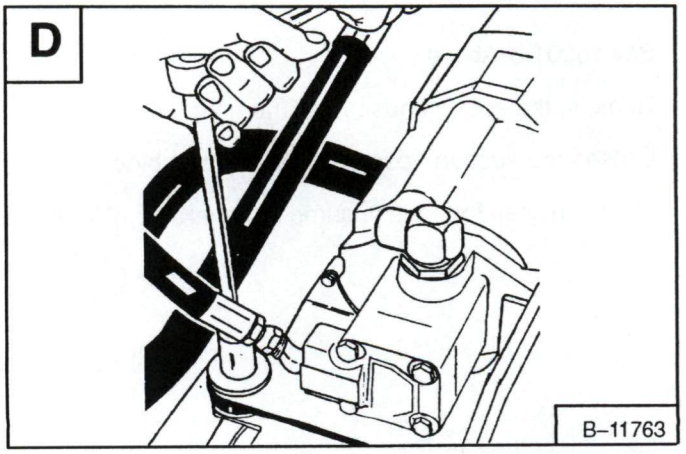

HYDROSTATIC PUMP (Cont'd)

Removal (Cont'd)

NOTE: If the rear pump mount is to be removed make sure to note the location of the washers between the mount and frame. These washer(s) (Item 1) [A], must be installed at the correct location to give the pump and engine the correct alignment.

Remove the bolts from the rear hydrostatic pump mount.

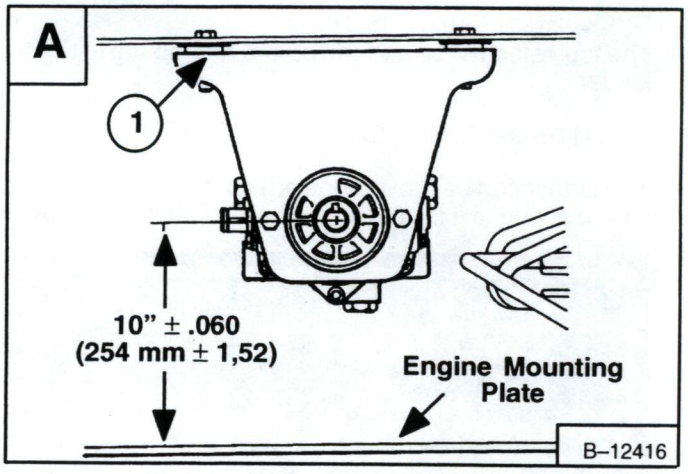

Move the pump forward and lift it up to remove it from the loader **[B]**. (Example shown is from S/N 14999 & Below.)

Remove the spline coupler from the input shaft on the rear of the pump.

NOTE: Refer to the Component Repair Manual for the *Hydrostatic Pump Disassembly And Assembly.*

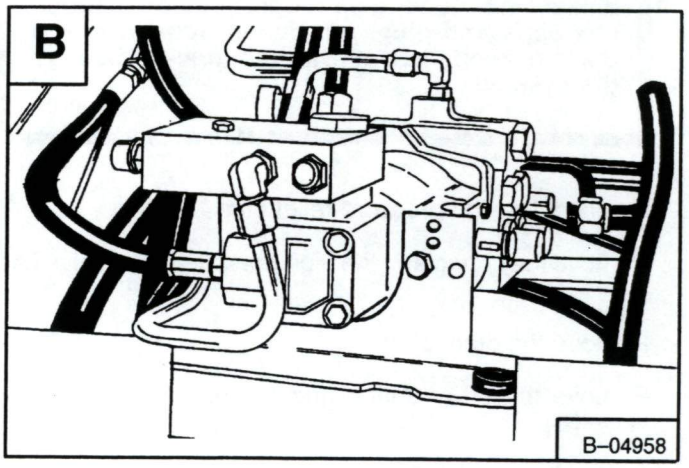

Installation

Install the front pump mount using the same number of shims removed.

Lower the pump assembly into position on the transmission case and guide the spline pump drive shaft and coupler yoke into engagement.

Install the bolts in the front and rear pump mounts. Fasten the pump assembly to the rear mount.

Use key stock against the spider on the drive coupler to check alignment **[C]**.

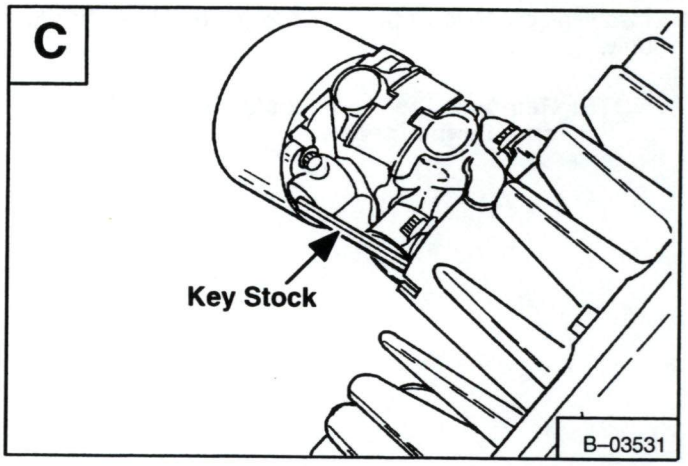

Loosen the engine mounts if necessary to align the drive coupler.

If the height alignment is not correct, add or subtract half thickness washers at the rear pump mount **[D]**.

NOTE: Measure from engine mounting plate to center of pump shaft. Also measure engine distance to center of the flywheel, the two dimensions must be as close as possible.

Check engagement of coupling onto spline. Maximum clearance between pump drive flange and yoke is 1/4 inch (6,35 mm).

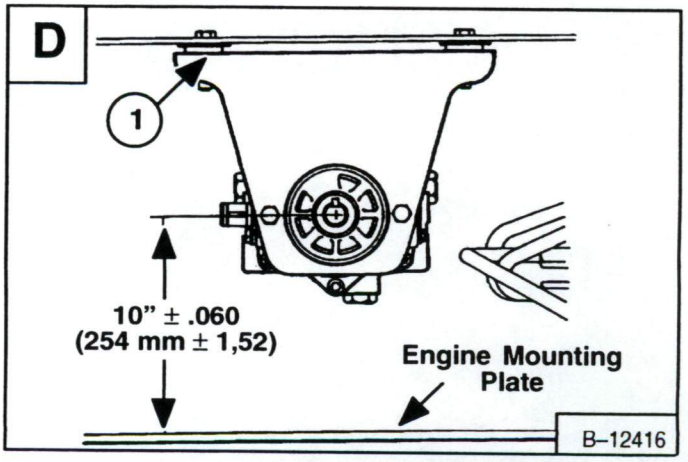

TOW VALVES

The tool listed will be needed before attempting to tow the loader.

MEL1179–2 – Towing Tool

The loader can be moved (towed) for a short distance (at a slow speed) if it is unable to do so under its own power.

IMPORTANT

When repairing hydrostatic and hydraulic systems, clean the work area before disassembly and keep all parts clean. Always use caps and plugs on hoses, tubelines and ports to keep dirt out. Dirt can quickly damage the system.

I–2003–0888

Remove the high pressure relief plug.

Remove the spring and the high pressure relief valve **[A]**.

Remove the other plug.

Remove the other spring and the high pressure relief valve **[B]**.

Install the owing tools (Items 1 & 2) **[C]** and then the plugs only.

NOTE: Remove the tow tools before trying to operate the loader.